REVISIONS				
REV.	ECO#	DESCRIPTION	DATE	APPROVED
01	N/A	INITIAL RELEASE	8/22/23	SEB
02	1611	TEMP ADDITION OF 30099	3/6/24	SEB

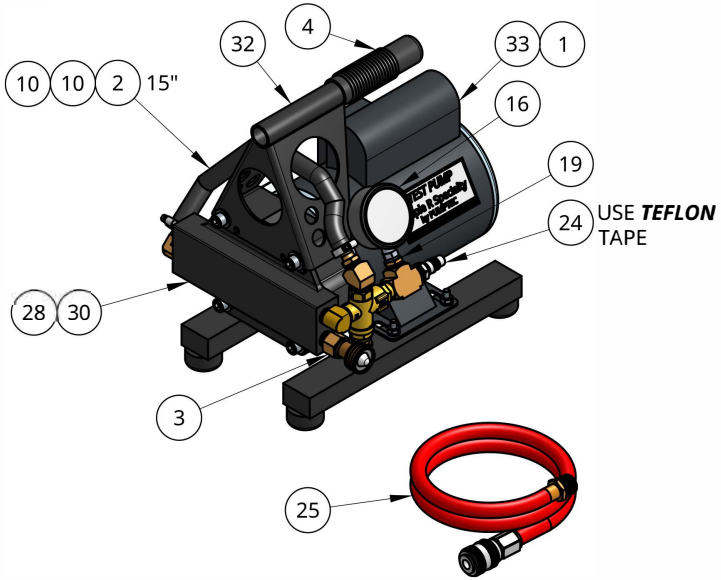

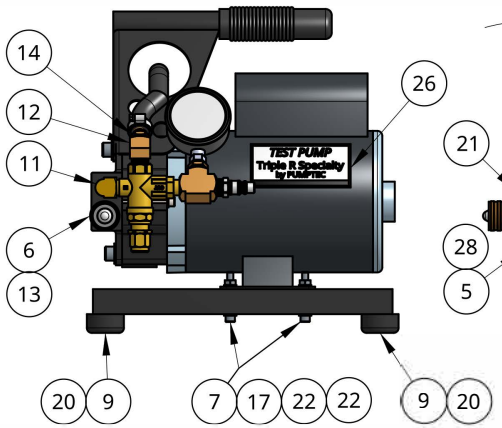

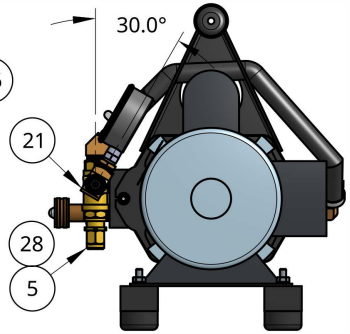

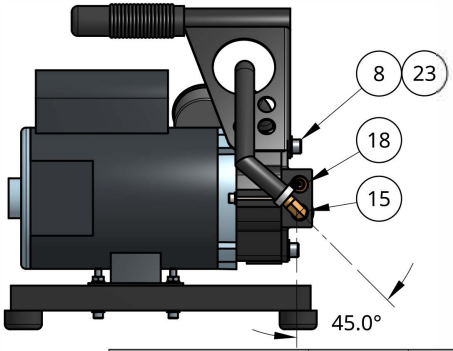

ITEM	PART NUMBER	DESCRIPTION	QUANTITY
1	10096	KIT-C, 300 SERIES, .240 CAM, 7/16 THREAD, .465 THICK	1
2	30041	HOSE, 300 PSI, BULK, 1/2 ID, BLACK, EPDM, AG	15"
3	30099	ADAPTER, 3/8 MALE X 3/8 FEMALE, BRASS	1
4	30133	GRIPS, FOR POWER WASHERS	1
5	30928	UNLOADER, VR54, W/O SPRING OR KNOB, W/ STAINLESS STEEL BALL	1
6	31019	GARDEN HOSE FEMALE SWIVEL, 3/8MALE, BRASS	1
7	31155	BOLT, 1/4-20 X 1-3/4, SHCS, STAINLESS STEEL	4
8	31162	BOLT, 3/8-16 X 2-3/4, SHCS, STAINLESS STEEL	4
9	31177	RECESSED MOUNTING PAD 60 DURO SBR W/WASHER	4
10	31200	CLAMP, HOSE, H6, (3/8 - 7/8"), USE ON 1/2" HOSE	2
11	31222	ELBOW, 3/8M X 3/8F, BRASS, CLOSE (STREET)	1
12	31226	ELBOW, 3/8M X 3/8F, 45 DEGREE, BRASS (STREET)	1
13	31236	FILTER WASHER (FOR GARDEN HOSE)	1
14	31259	HOSE BARB, 3/8MALE, 1/2BARB, BRASS	1
15	31268	HOSE BARB ELBOW, 3/8MALE, 1/2BARB, BRASS	1
16	31285	PRESSURE GAUGE, 0-600 PSI, BOTTOM MOUNT	1
17	31317	NUT, 1/4-20, NYLOC, ZINC PLATE	4
18	31330	PLUG, 3/8, COUNTER SUNK, BRASS	1
19	31358	REDUCING BUSHING, 3/8M X 1/4F, HEX, BRASS	1
20	31374	LAG SCREW 1/4 X 1" HEX HEAD ZINC PLATED	4
21	31387	TEE, 3/8FFF, BRASS	1
22	31406	WASHER, FLAT, 1/4, STAINLESS STEEL	8
23	31407	WASHER, FLAT, 3/8, STAINLESS STEEL	4
24	31665	#42-4 3/8 MALE QD PLUG	1
25	31666	AR40-038-08MP-4804-10FT..3/8 HOSE W/QD & 1/2 ...	1
26	31702	LABEL, TRIPLE R SPECIALTY	1
27	31703	RRR, MANUAL	1
28	40236	H-CHANNEL SEAL, SERIES 348/356/357	1
29	40628	SPRING, MV520/VR54, YELLOW	1
30	54021	SUB-PUMP, 356U, ANODIZED, SS PLUNGER, BUNA, M-VALVE, 4 - 3/8" PORTS, BLACK, UNTESTED	1
31	C9016-0002	MOUNTING RAIL FINISHED	2
32	C9016-0005	HANDLE WITHOUT GRIP (356/M44)	1
33	M3	MARATHON, 1/2 HP, 120/230V, 8.6/4.3A, 356U/360U/X-SERIES	1

UNLESS OTHERWISE SPECIFIED, DIMENSIONS ARE IN INCHES
.XX = ±.0-
.XXX = ±.00-
.XXXX = ±.000-
ANGULAR = ± °
FRACTIONAL = ±
SURFACE FINISH

DO NOT SCALE DRAWING

BREAK ALL SHARP EDGES AND REMOVE BURRS

THIRD ANGLE PROJECTION

	NAME	DATE
DRAWN	GRANT SCHROEDTER	8/22/23
CHECKED		
APPROVED	S BABCOCK	

MATERIAL

FINISH

ARGCO

TITLE
Pumptec, Inc. (formerly Triple R Specialty)
HT-89A

SIZE B | DWG NO. 81948 | REV 02

SCALE 1:5 | WEIGHT | SHEET 1 of 1